Common Mode Filter
Size 1210

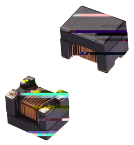

- High self-resonance frequency enables high cut-off frequency, wide band noise suppress in high frequency.
- Small size and low profile.
- Operating temperature -40~+125℃ (Including self - temperature rise)
- Small size and low profile.
-

- USB 3.0 lines
- AV interfaces, such as HDMI 1.3/1/4
- High-speed signal lines

Dimensions: [mm]

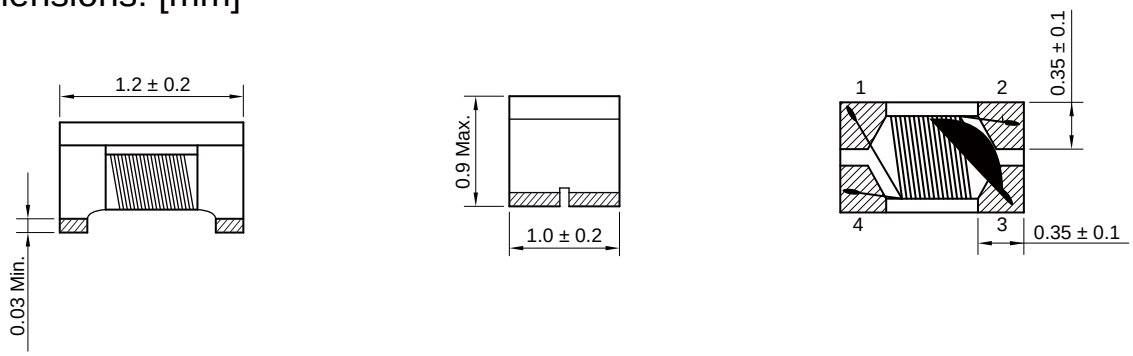

Schematic:

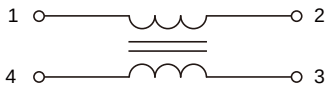

Land Pattern: [mm]

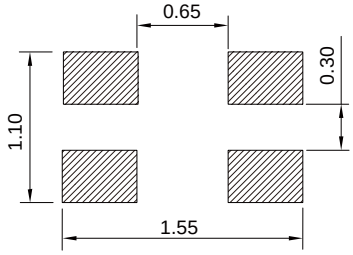

Electrical Properties:

Part No	Impedance @ 100 MHz (Ω)	Tolerance	DC Resistance Max. (Ω)	Rated Current Max. (mA)	Rated Volt (V)	Withstand Volt (V)	IR Min. (MΩ)
SCM1210HS-350-02	35	±25%	0.30	200	50	125	10
SCM1210HS-500-02	50	±25%	0.30	250	50	125	10
SCM1210HS-600-02	60	±25%	0.30	250	50	125	10
SCM1210HS-900-02	90	±25%	0.40	200	50	125	10
SCM1210HS-900-04	90	±25%	0.40	400	50	125	10

Typical Electrical Characteristics:

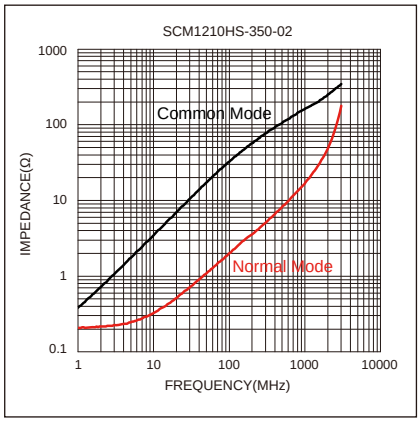

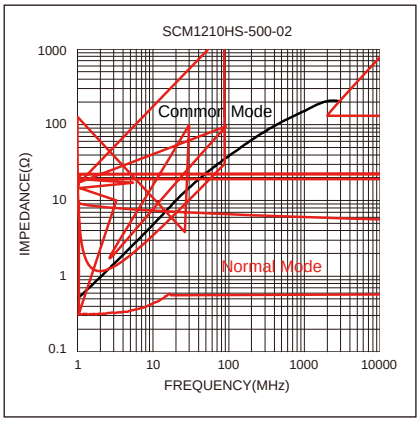

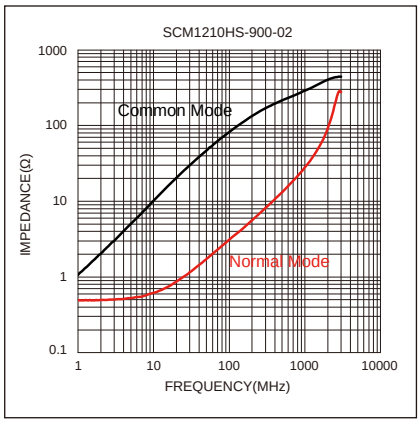

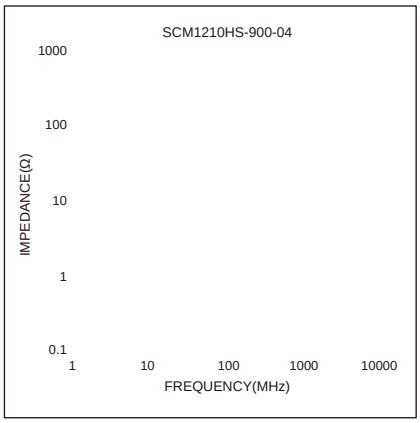

Soldering Reflow:

Preheat condition: 150 ~200℃/ 60~180 sec.

Allowed time above 217℃: 60~150 sec.

Packaging Information:

Tape Dimension:

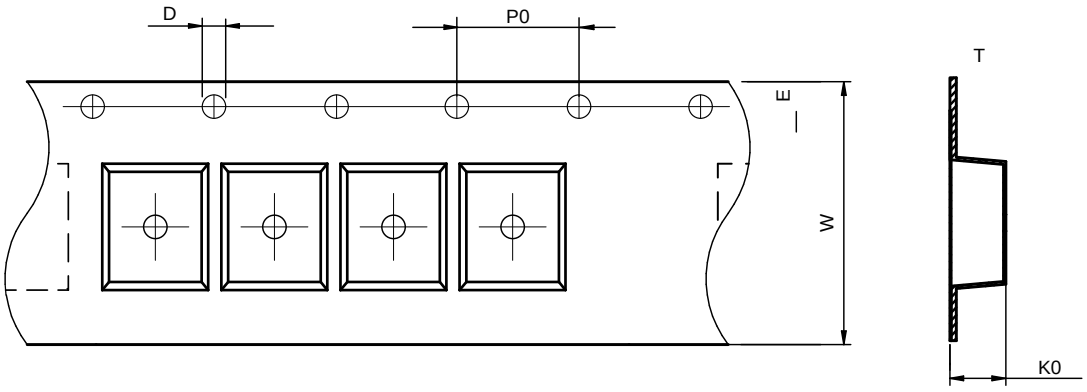

Series	A0 (mm)	B0 (mm)	D (mm)	P0 (mm)	P1 (mm)	W (mm)	K0 (mm)	E (mm)	T (mm)
SCM1210HS	1.12±0.1	1.40±0.1	1.5±0.1	4.0±0.1	4.0±0.1	8.0±0.3	1.05±0.1	1.75±0.1	0.22±0.05