BCMA Series

Common Mode Filters For Automotive Signal Line

Size 3225

FEATURES

-
- ters f
-
-
-

APPLICATION

- interf ST, USB2.0, IDB-1394, et

Dimensions: [mm]

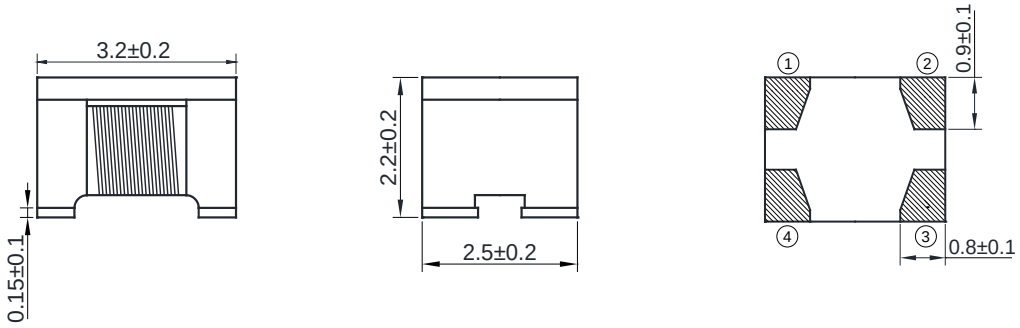

Land Pattern: [mm]

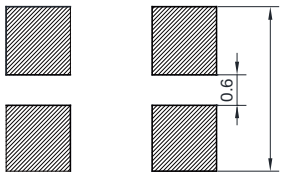

Electrical Properties:

Typical Electrical Characteristics:

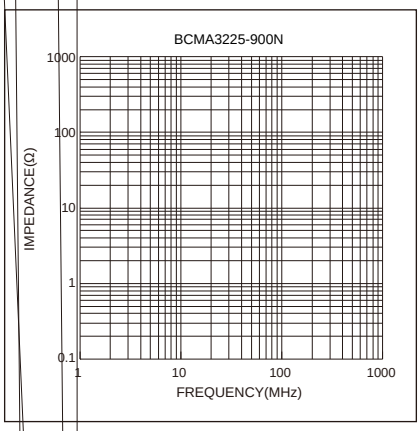

Soldering Reflow:

Packaging Information:

Tape Dimension：

A0 (mm)	B0 (mm)	D (mm)	P0 (mm)	P1 (mm)	W (mm)	K0 (mm)	E (mm)	T (mm)
2.88 ± 0.1	3.65 ± 0.1	1.5 ± 0.1	4.0 ± 0.1	4.0 ± 0.1	8.0 ± 0.1	2.50 ± 0.1	1.75 ± 0.1	0.26 ± 0.05

Peel force of top cover tape:

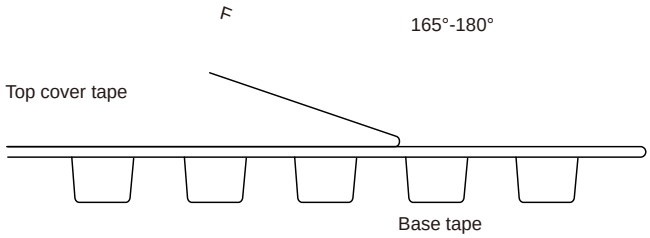

Reel Dimension：[mm]

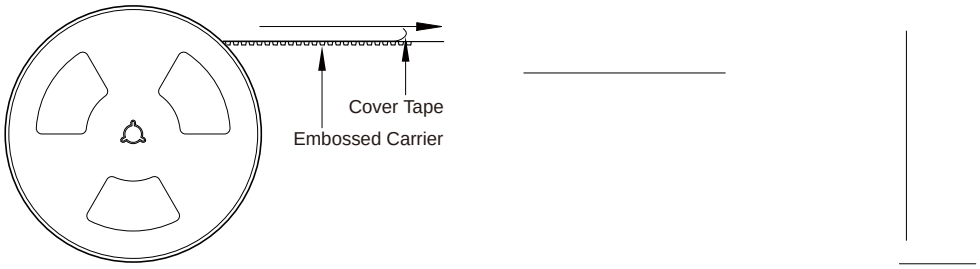

Cautions and Warnings:

Storage Conditions：

- The storage period is within 12 months after the completion of production. Be sure to follow the storage conditions (temperature: -5 to 35°C, humidity: 75% RH Max).If the storage period elapses, the soldering of the terminal electrodes may deteriorate.The warranty period is one year.
- Product should not be exposed to environment with high temperature, high humidity, dust, corrosive gas and etc.
- Products should be handled with care to avoid damage or contamination from perspiration and skin oils.
- Please always handle products carefully to prevent any damage caused by dropping down or inappropriate removing.

Operation Instructions:

- Self heating (temperature increase) occurs when the power is turned ON, so the tolerance should be sufficient for the set thermal design.
- Before soldering, be sure to preheat components.The preheating temperature should be set so that the temperature difference between the solder temperature and chip temperature does not exceed 150°C.
- Soldering corrections after mounting should be within the range of the conditions determined in the specifications.If overheated, a short circuit, performance deterioration, or lifespan shortening may occur.
- Generally, Koher might not be familiar with either customer's specific application or actual requests as customer does.As a result customer shall be responsible for checking and confirming whether Koher product with the performance described in the product specification is suitable for using in customer's particular application or not.

Conformal coating:

- The inductance value may change due to the high cure stress of the resin used for coating or molding.
- An open circuit may occur due to mechanical stress from the resin, its amount, cured shape oeu ch13 or
-